FUJITSU

shaping tomorrow with you

LNET Multi-rail Improvement

Tatsushi Takamura and Shinji Sumimoto, Ph.D.

Next Generation Technical Computing Unit

FUJITSU LIMITED Sept. 24th, 2019

OpenSFS

Copyright 2019 FUJITSU LIMITED

Outline of This Talk

FUJITSU

- Backgrounds
- Introduction of FEFS IB Multi-rail and Lustre LNet Multi-rail
- Evaluation of LNet Multi-rail
  - The result of Evaluation
  - Problems and How to fix them
- Summary and Conclusion

Copyright 2019 FUJITSU LIMITED

Backgrounds (FEFS IB Multi-rail)

- Fujitsu developed FEFS IB Multi-rail and operated on K computer and other HPC systems for over 7 years

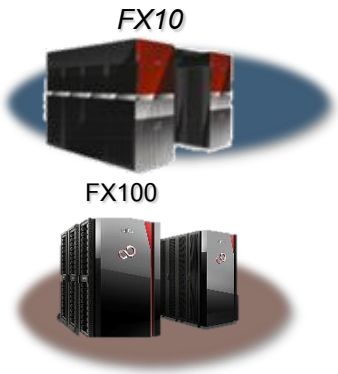

- IB Multi-rail Features:
  - High availability even if a single point of IB failure occurs
  - High throughput by using multiple IB interfaces
  - Various configurations
    - Not only Symmetric connections but also Asymmetric connections

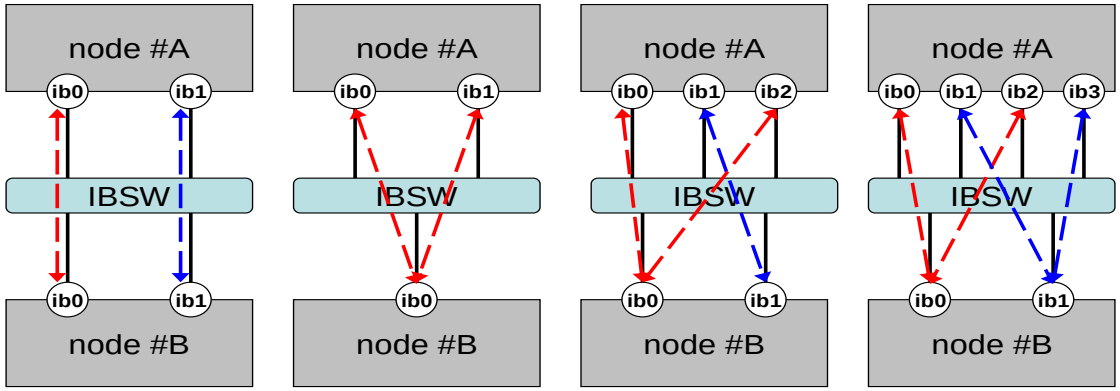

Copyright 2019 FUJITSU LIMITED

Backgrounds (Lustre LNet Multi-rail)

FUJITSU

- Lustre community is now developing similar Multi-rail features on LNet level
  - LNet Multi-rail, LNet Network Health, Etc…
- However the development is still going on
- Therefore, we have evaluated the Lustre LNet Multi-rail assuming the same features of FEFS IB Multi-rail
  - In order to give feedback to current LNet Multi-rail implementation

Copyright 2019 FUJITSU LIMITED

FEFS IB Multi-rail (presented at LAD14)

FUJITSU

- FEFS Approach: Add IB Multi-rail function into Lustre network driver (o2iblnd).
  - All IB I/F on the client can be used to communicate with a server.
  - All IB connections are used by round-robin order.
- Continue communication when single point of IB failure occurs.
  - All IB connections are used by round-robin order by each requests.

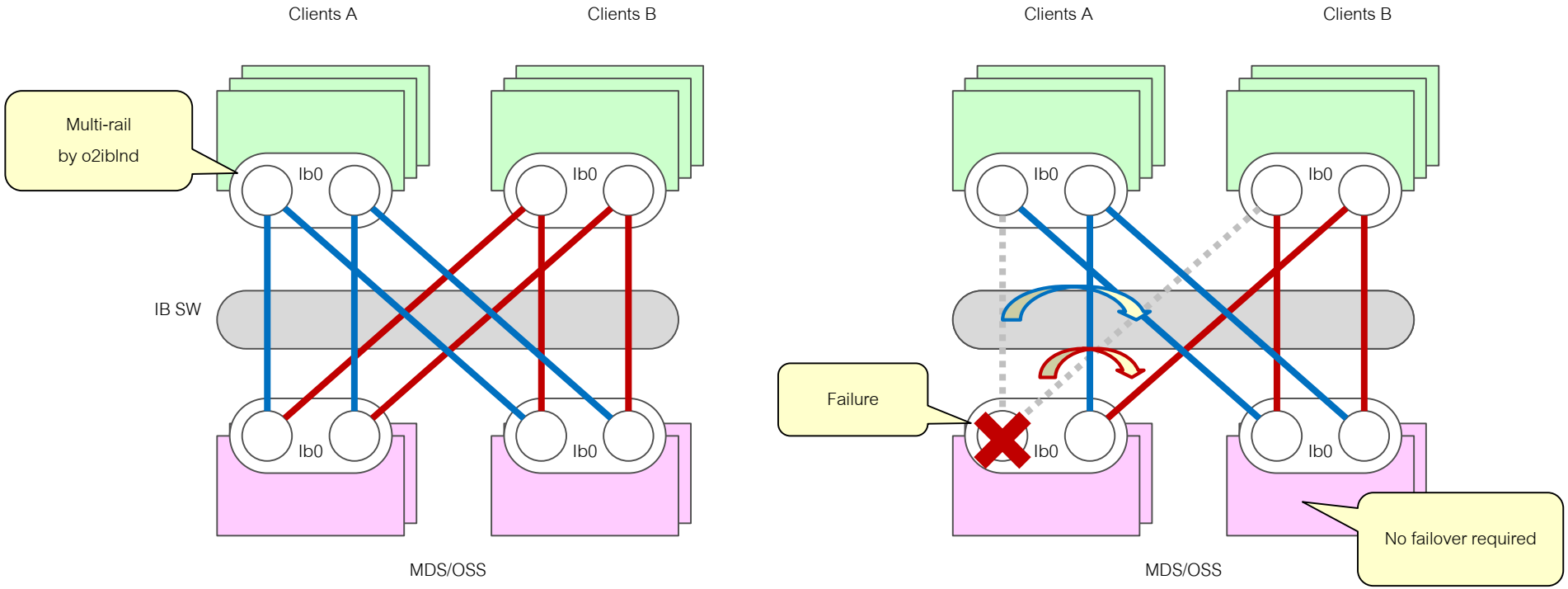

Copyright 2019 FUJITSU LIMITED

Lustre LNet Multi-rail and LNet Health

- LNet Multi-rail: Introduced in Lustre 2.10(LU-7734)
  - Using multiple interfaces including Ethernet and InfiniBand
- LNet Network Health: Introduced in Lustre 2.12(LU-9120)
  - Detecting network failures of local interface, remote interface, network timeouts and etc.
  - Switching and resending among different interfaces

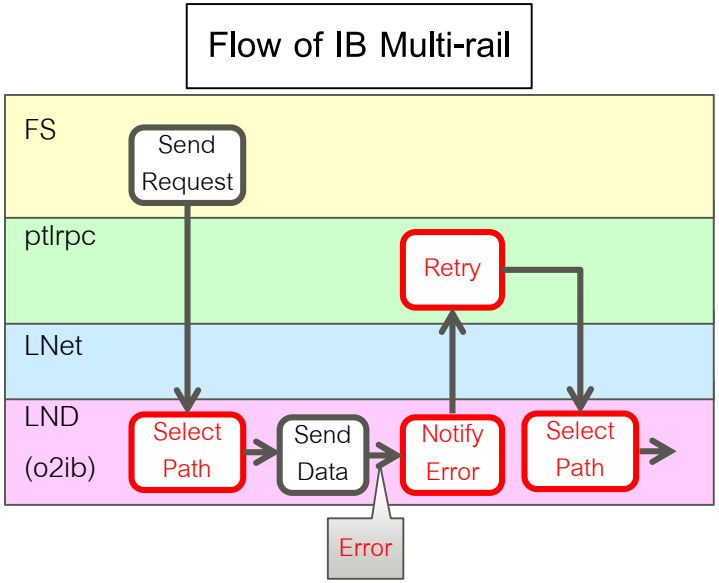

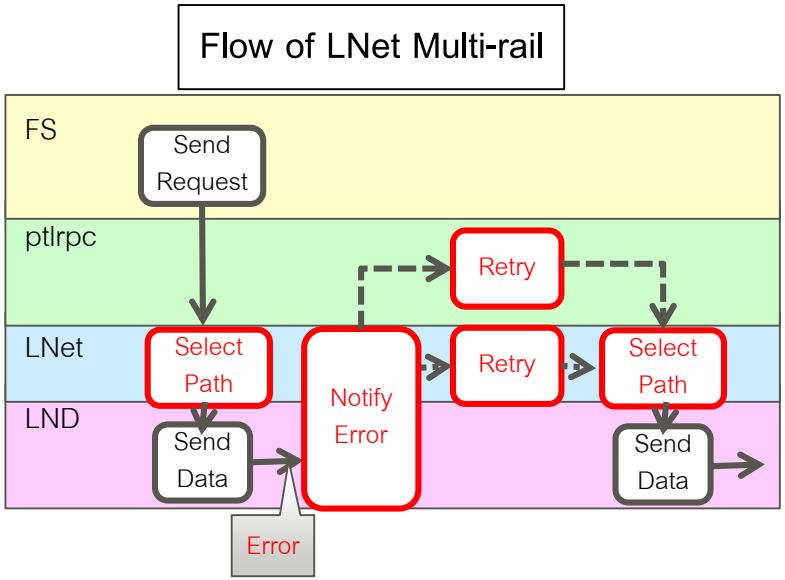

The basic idea is the same as FEFS IB Multi-rail

(The difference is LND level or LNet level)

Copyright 2019 FUJITSU LIMITED

Overview of LNet Health

- Detecting device status
  - A local Network Interface (NI) is marked fatal, if the device has gone into a fatal
    - ex. IB_EVENT_DEVICE_FATAL, IB_EVENT_PORT_ERR
- Maintaining health value
  - Each NI (both local and remote) has a health value (HV)
  - HV is decremented when communications fail and incremented when succeeds
- Controlling path selection
  - Selecting the healthiest local NI by health value
    - Fatal NI is removed from the candidates
  - Selecting the healthiest remote NI which belong to the same network which the local NI connected
  - Communicating using the selected NIs

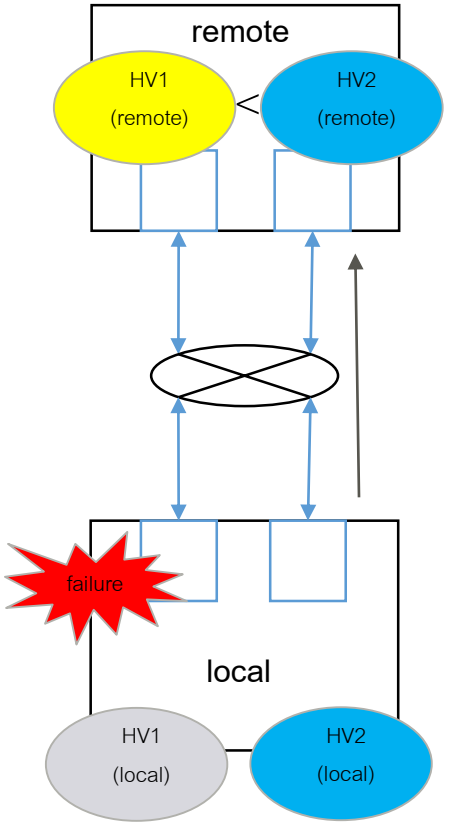

Copyright 2019 FUJITSU LIMITED

Evaluation of LNet Multi-rail

FUJITSU

Evaluation Items

I/O Continuity

Check Items	How to check
I/O failover works correctly(No I/O hang) against single NI failure	Single NI failure on server side
	Single NI failure on client side
No I/O error after recovery	All NI failures on server side
	All NI failures on client side

*NI failure: rejecting IB cable from HCA

I/O Throughput

Check Items	How to check
Same I/O performance of FEFS IB Multi-rail	Comparing LST and IOR: Server only configuration
	Comparing LST and IOR: Server and Client configuration

Copyright 2019 FUJITSU LIMITED

Evaluation Result Summary

FUJITSU

Check Items	IB(FEFS)	LNet(Lustre)	
I/O failover works correctly(No I/O hang) against single NI failure	✔	X	We found 4 problems
No I/O error after recovery	✔	✔	OK
Same I/O performance of FEFS IB Multi-rail	✔	✔	OK

Issue	Description
No.1	Unable to detect IB hardware failure (NI is not marked fatal). This may cause selecting a failed NI for sending.
No.2	Decrementing a health value of normal NI. This may cause sending messages to a failed NI.
No.3	Unable to use Multi-rail on asymmetric Nis.
No.4	After recovery of NI failure, the NI is not used for a while (1000sec).

Copyright 2019 FUJITSU LIMITED

Problem #1: Unable to detect IB hardware failure

FUJITSU

Issue

- LNet health unable to detect IB hardware failure (NI is not marked fatal)
- This may cause extra retry messages because of sending messages from a failed NI

Why came from?

- IB driver notifies “IB event” if IB device failure occurs
- But in current implementation, o2iblnd only detects these event from “QP event”

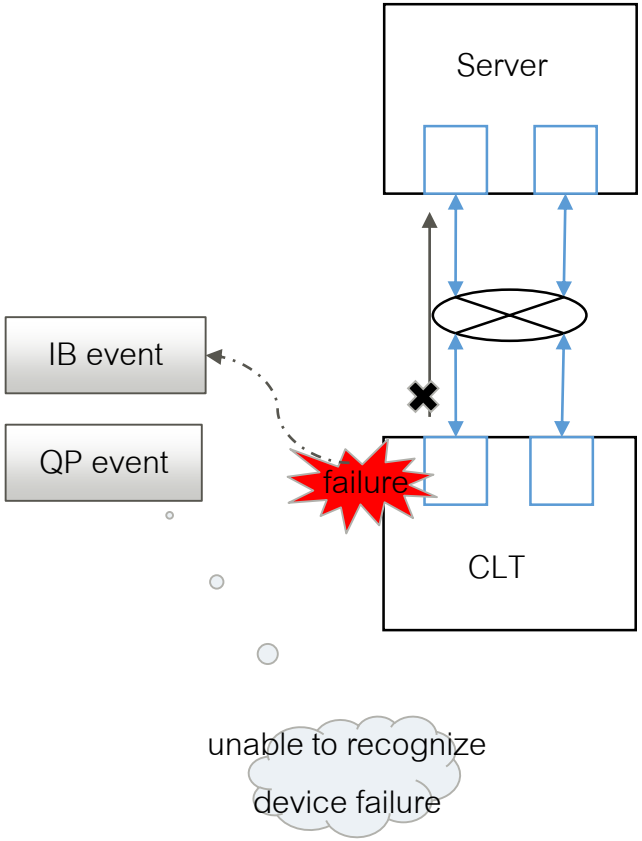

Copyright 2019 FUJITSU LIMITED

Problem #1: Proposed Solution

FUJITSU

- Adopting FEFS IB Multi-rail scheme
  - Using an event handler (ib_register_event_handler) which kernel provides
  - The NI is set fatal correctly and will not be used

- Effect
  - LNet health can select correct local NI without message retry

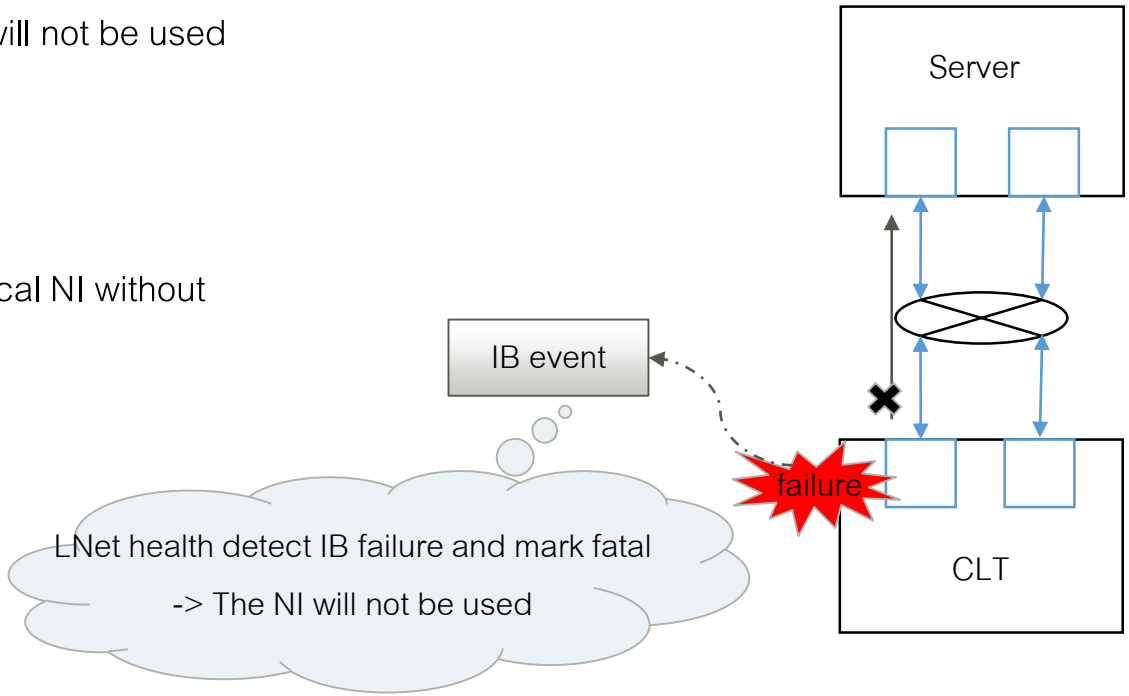

Copyright 2019 FUJITSU LIMITED

Problem #2: Decrementing health value of normal NI

FUJITSU

Issue

- LNet health could decrement a health value(HV) of normal NI
  - Though remote NI failure occurs, HV of local NI would be decremented
- This may cause extra retry messages because sending messages to a failed NI

Why came from?

- LNet health unable to detect local NI failure(resolved by problem #1)
- LNet health decrement local health value if connection failed

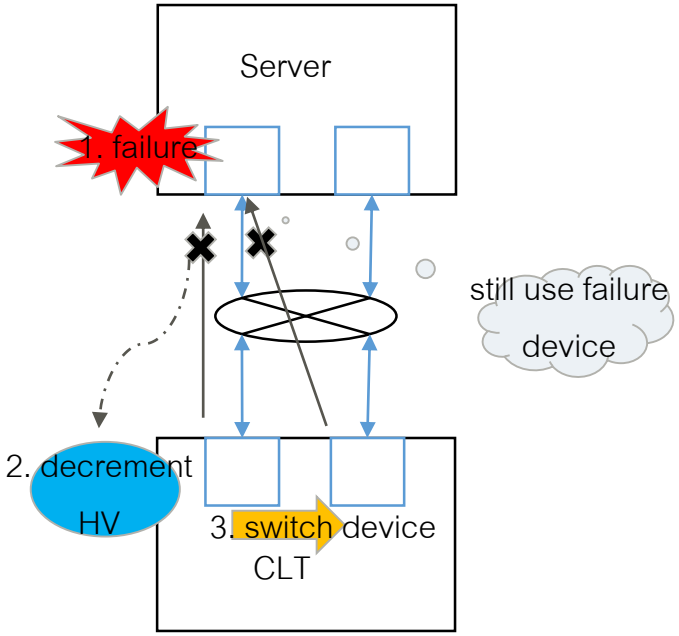

Copyright 2019 FUJITSU LIMITED

Problem #2: Proposed Solution

- LNet health can detect local NI failure using solution of problem #1
  - Failure local NI will not be used, so we can judge that remote NI is the cause of connection fail
- We modify to decrement of remote health value

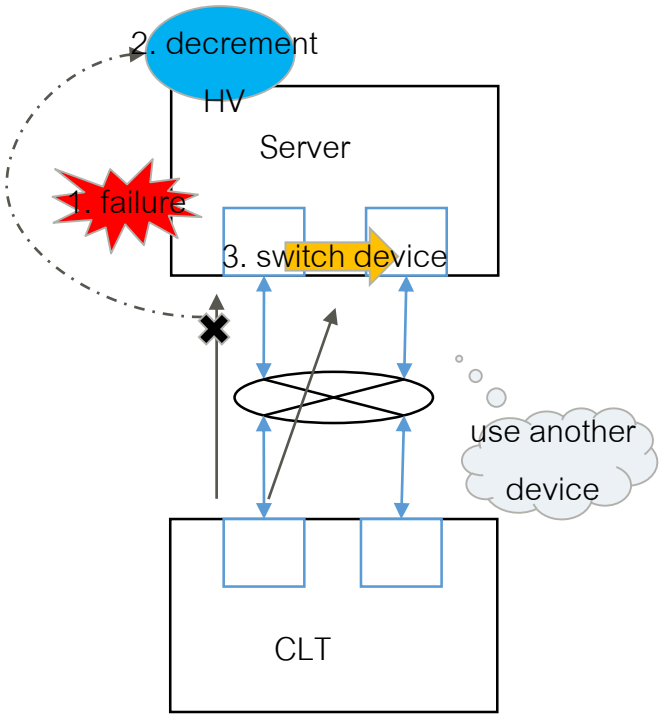

- Effect
  - LNet health can set health value correctly
    - LNet health can select correct remote NI and reduce message resending

Copyright 2019 FUJITSU LIMITED

Problem #3: Unable to use Multi-rail on asymmetric NIs

FUJITSU

- Iusse
  - If the sending node is Multi-rail and the receiving node is non-Multi-rail, the sending node uses always the same NI
  - Even if the sending NI is blocken, the blocken NI is used
- Why came from?
  - This seems to be a specification on asymmetric Multi-rail environment

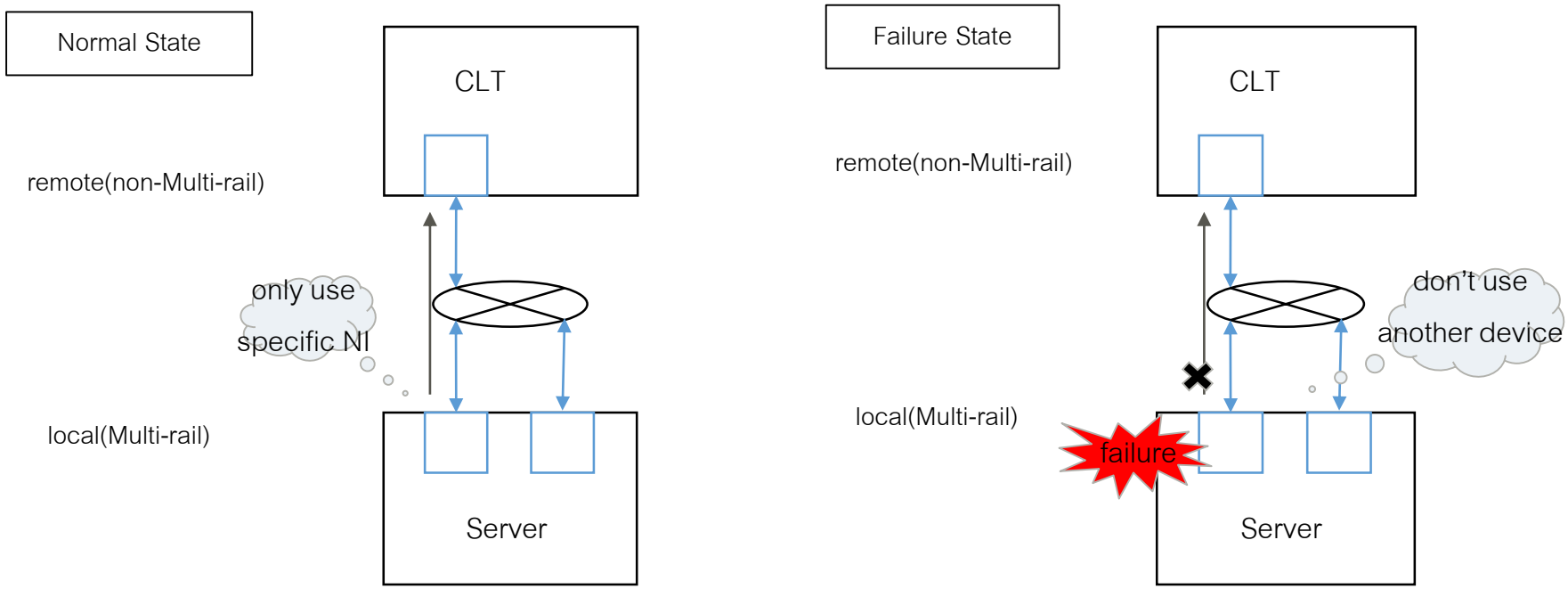

Copyright 2019 FUJITSU LIMITED

Problem #3: Proposed Solution

- Switching another normal NI if LNet health detects NI failure (by using solution of problem#1)
  - These configurations are common for our users

- Effect
  - LNet can continue communicating unless all NI failure

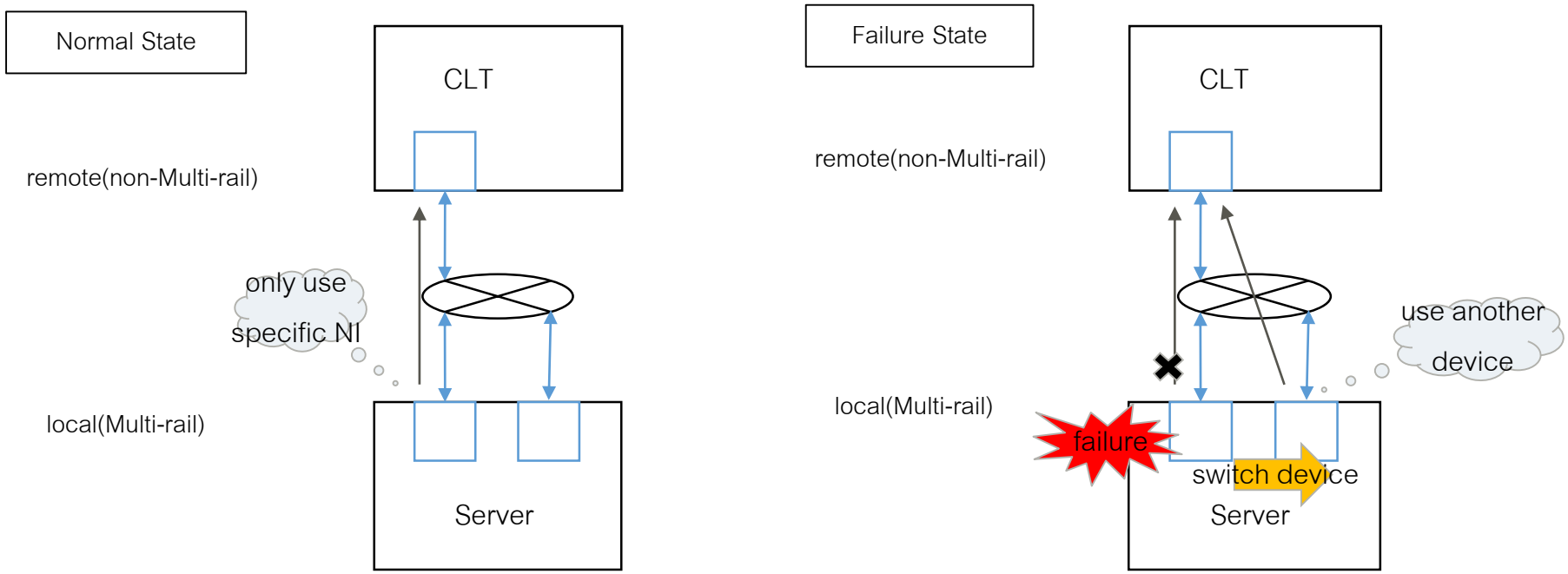

Copyright 2019 FUJITSU LIMITED

Problem #4: After recovery of NI failure, the NI is not used

FUJITSU

- Issue
  - It takes for a while(1000s) to recovery health value and to multiple NIs
- Why came from?
  - The health value will be decremented by periodically by recovery process if the NI failed
    - Always fail and health value is decremented (the health value hit the floor soon)

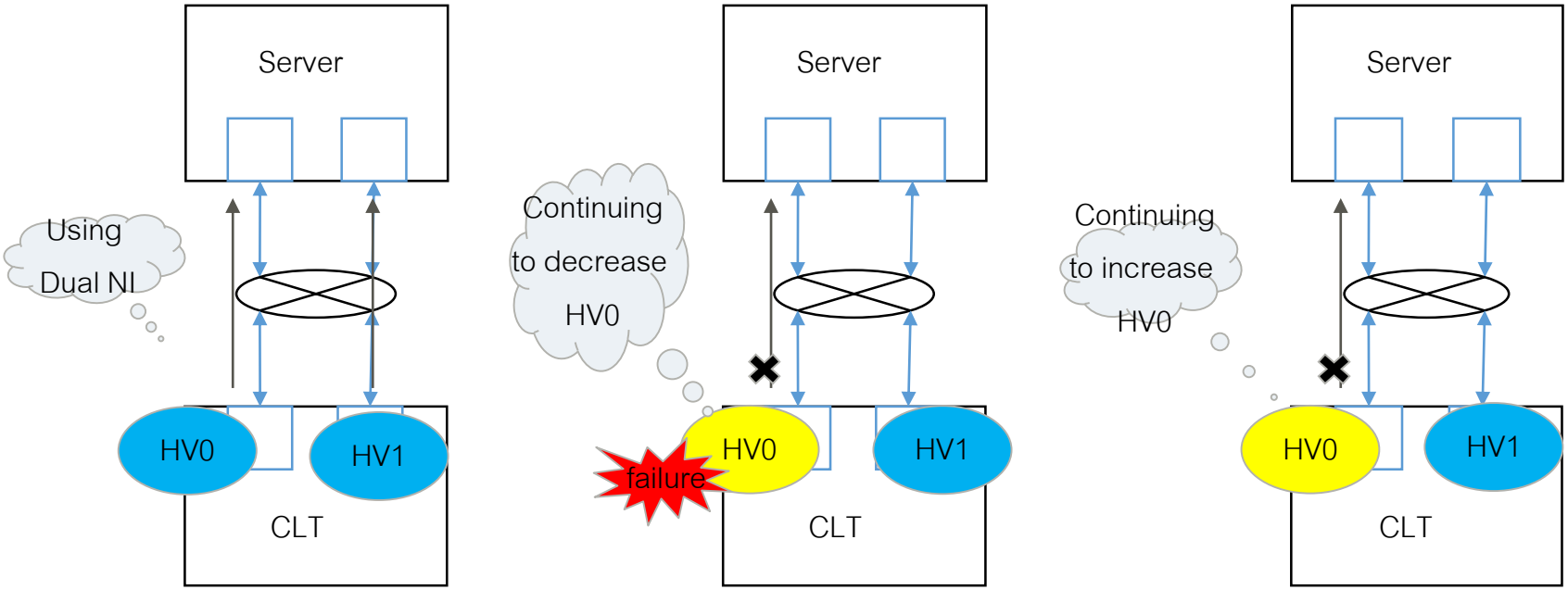

Copyright 2019 FUJITSU LIMITED

Problem #4: Proposed Solution

FUJITSU

- Stopping health value decrementing after a device failure is detected
  - Not decrementing by periodically by recovery process
  - Better to use quickly because recent IB is stable and high quality

- Effect
  - Able to use the NI in a few seconds after device recovery

- Comment form community
  - Could a better approach be a more weighted recovery in consideration of flapping hardware (LU-12292)
  - This idea sounds good
    - Recover in 15 sec is reasonable

Copyright 2019 FUJITSU LIMITED

Summary of Issues and Modifications

FUJITSU

Issue	Description	Modification
No.1	Unable to detect IB hardware failure (NI is not marked fatal).	We handled IB hardware failure and a path is selected without waiting for health value decremented
No.2	Decrementing a health value of normal NI.	We set health value appropriately and reduced extra resending
No.3	Unable to use Multi-rail on asymmetric NIs	We switched switch another normal NI to avoide for the system to become unusable
No.4	After recovery of NI failure, the NI is not used for a while (1000sec)	We stopped health value decrement at recovery processing to use the NI in a few seconds after device recovery

Copyright 2019 FUJITSU LIMITED

Conclusion

- We evaluated LNet Multi-rail and improved it
- Fujitsu continues to improve Lustre features and give feedbacks
- Any questions?

Copyright 2019 FUJITSU LIMITED

FUJITSU

shaping tomorrow with you